CATALOG OF REPLACEMENT PARTS



900RX AND MSA HEAVY DUTY GAS GRIDDLES

924RX

936RX

948RX

960RX

972RX

MSA24

MSA36

MSA48

MSA60

MSA72

ASA24

ASA36

ASA48

ASA60

ASA72

 © Vulcan 2026

Table of Contents

6 900RX AND MSA MODELS MANUFACTURED PRIOR TO MARCH 2010 INTERIOR COMPONENTS

10 900RX AND MSA MODELS MANUFACTURED PRIOR TO MARCH 2010 EXTERIOR COMPONENTS

12 900RX AND MSA MODELS MANUFACTURED MARCH 2010 TO PRESENT INTERIOR COMPONENTS

16 900RX AND MSA MODELS MANUFACTURED MARCH 2010 TO PRESENT EXTERIOR COMPONENTS

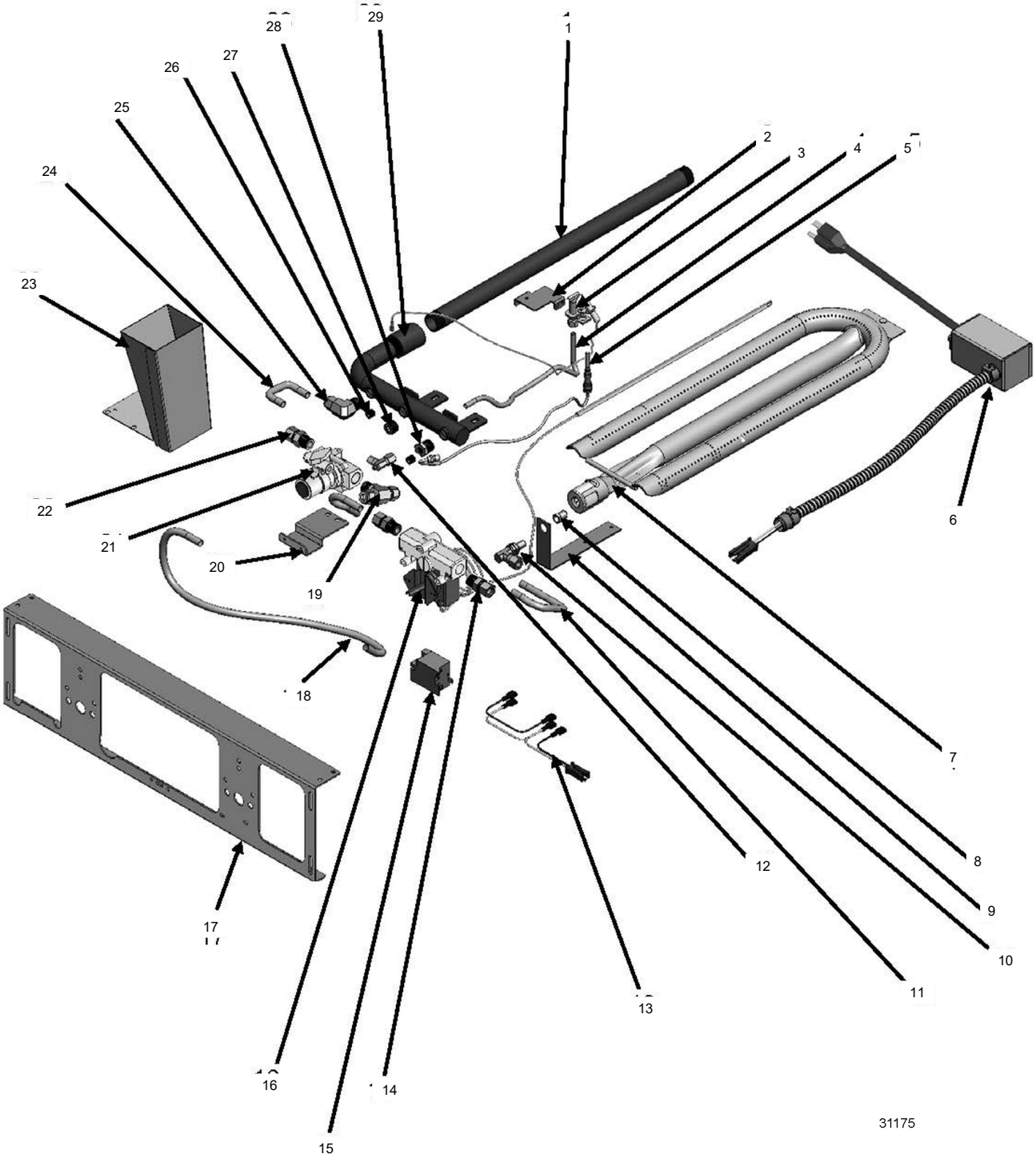

900RX AND MSA MODELS MANUFACTURED PRIOR TO MARCH 2010 INTERIOR COMPONENTS

900RX AND MSA MODELS MANUFACTURED PRIOR TO MARCH 2010 INTERIOR COMPONENTS

ILLUS.	PART NO.	NAME OF PART	AMT.
PL-29074			
1	00-713494	3/4" NPT X 22.75" NIPPLE	1
2	00-498057	Pilot Bracket - 24"	1
	00-498057	Pilot Bracket - 36", 48"	2
	00-498057	Pilot Bracket - 60", 72"	3
3	00-976687-0SERV	Kit, Pilot Assembly (NAT. Gas - 900RX) - 24"	1
	00-976687-0SERV	Kit, Pilot Assembly (NAT. Gas - 900RX) - 36", 48"	2
	00-976687-0SERV	Kit, Pilot Assembly (NAT. Gas - 900RX) - 60", 72"	3
	00-976687-000NA	Pilot - 24"	1
	00-976687-000NA	Pilot - 36", 48"	2
	00-976687-000NA	Pilot - 60", 72"	3
	00-712363	LP Gas Pilot Orifice - 24"	1
	00-712363	LP Gas Pilot Orifice - 36", 48"	2
	00-712363	LP Gas Pilot Orifice - 60", 72"	3
	00-720041	NAT. Pilot Orifice - 24"	1
	00-720041	NAT. Pilot Orifice - 36", 48"	2
	00-720041	NAT. Pilot Orifice - 60", 72"	3
4	00-722229	1/4" X 18" Flex Tubing - 24"	1
	00-722229	1/4" X 18" Flex Tubing - 36", 48"	2
	00-722229	1/4" X 18" Flex Tubing - 60", 72"	3
5	00-412788-00020	Thermocouple T46 18" - 24"	1
	00-412788-00020	Thermocouple T46 18" - 36", 48"	2
	00-412788-00020	Thermocouple T46 18" - 60", 72"	3
6	00-758567-000A1	J-BOX ASSEMBLY (Box, Conduit, Power Cord and Insulated Lead Wires - 900RX)	1
7	00-719737-00005	Burner Assy. - 24"	2
	00-719737-00005	Burner Assy. - 36"	3
	00-719737-00005	Burner Assy. - 48"	4
	00-719737-00005	Burner Assy. - 60"	5
	00-719737-00005	Burner Assy. - 72"	6
8	00-719951-00041	Hood - Orifice (Drill 41) (NAT. Gas) - 24"	2
	00-719951-00041	Hood - Orifice (Drill 41) (NAT. Gas) - 36"	3
	00-719951-00041	Hood - Orifice (Drill 41) (NAT. Gas) - 48"	4
	00-719951-00041	Hood - Orifice (Drill 41) (NAT. Gas) - 60"	5
	00-719951-00041	Hood - Orifice (Drill 41) (NAT. Gas) - 72"	6
	00-719951-00052	Hood - Orifice (Drill 52) (LP. Gas) - 24"	2
	00-719951-00052	Hood - Orifice (Drill 52) (LP. Gas) - 36"	3
	00-719951-00052	Hood - Orifice (Drill 52) (LP. Gas) - 48"	4
	00-719951-00052	Hood - Orifice (Drill 52) (LP. Gas) - 60"	5
	00-719951-00052	Hood - Orifice (Drill 52) (LP. Gas) - 72"	6
9	00-498033	Orifice Bracket - 24"	2
	00-498033	Orifice Bracket - 36"	3
	00-498033	Orifice Bracket - 48"	4
	00-498033	Orifice Bracket - 60"	5
	00-498033	Orifice Bracket - 72"	6
10	00-719383	Elbow 3/8 Orifice MPT - 24"	2
	00-719383	Elbow 3/8 Orifice MPT - 36"	3
	00-719383	Elbow 3/8 Orifice MPT - 48"	4
	00-719383	Elbow 3/8 Orifice MPT - 60"	5
	00-719383	Elbow 3/8 Orifice MPT - 72"	6
11	00-722220	Tube - Flex (3/8 X 6 In.) - 24"	2
	00-722220	Tube - Flex (3/8 X 6 In.) - 36", 48"	3
	00-722220	Tube - Flex (3/8 X 6 In.) - 60", 72"	4
12	00-404193-00001	Valve - Pilot - 24"	1
	00-404193-00001	Valve - Pilot - 36", 48"	2
	00-404193-00001	Valve - Pilot - 60", 72"	3
13	00-498202-00024	924RX Wire Harness - 24"	1
	00-498202-00048	936RX and 948RX Wire Harness - 36", 48"	1
	00-498202-00072	960RX and 972RX Wire Harness - 60", 72"	1

900RX AND MSA MODELS MANUFACTURED PRIOR TO MARCH 2010 INTERIOR COMPONENTS

ILLUS.	PART NO.	NAME OF PART	AMT.
PL-29074			
14	00-719377	Connector - Straight 3/8 x 3/8 (Brass) - 24"	5
	00-719377	Connector - Straight 3/8 x 3/8 (Brass) - 36"	9
	00-719377	Connector - Straight 3/8 x 3/8 (Brass) - 48"	10
	00-719377	Connector - Straight 3/8 x 3/8 (Brass) - 60"	13
	00-719377	Connector - Straight 3/8 x 3/8 (Brass) - 72"	15
15	00-720385	Spark Module (900RX) - 24"	1
	00-720385	Spark Module (900RX) - 36", 48"	2
	00-720385	Spark Module (900RX) - 60", 72"	3
16	00-498096-00550	Valve (550F) T-Stat Combo	AR
17	00-498024-00024	24" Control Panel Bracket - 24", 60"	1
	00-498024-00024	24" Control Panel Bracket - 48"	2
	00-498024-00024	24" Control Panel Bracket - 72"	3
	00-498024-00036	36" Control Panel Bracket - 36", 60"	1
18	00-722425	Tube - Flex (3/8 x 8 In.) - 24"	2
	00-722425	Tube - Flex (3/8 x 8 In.) - 36"	3
	00-722425	Tube - Flex (3/8 x 8 In.) - 48"	4
	00-722425	Tube - Flex (3/8 x 8 In.) - 60", 72"	5
	00-722221	Flex Tubing (3/8 x 12 In.) - 36", 60", 72"	1
	00-722222	Flex Tube 3/8" X 18" - 24"	1
	00-722222	Flex Tube 3/8" X 18" - 36", 48"	2
	00-722222	Flex Tube 3/8" X 18" - 60"	3
	00-722222	Flex Tube 3/8" X 18" - 72"	4
	00-722224	Flex Tube 3/8" X 30" - 72"	1
*19	00-498028	Tee 3/8 Male Compression - 24", 36"	1
	00-498028	Tee 3/8 Male Compression - 48", 60"	2
	00-498028	Tee 3/8 Male Compression - 72"	3
20	00-498049	Safety Valve Bracket - 24"	1
	00-498049	Safety Valve Bracket - 36", 48"	2
	00-498049	Safety Valve Bracket - 60", 72"	3
21	00-498025	Valve - BASO - 24"	1
	00-498025	Valve - BASO - 36", 48"	2
	00-498025	Valve - BASO - 60", 72"	3
22	00-719377	Connector - Straight 3/8 x 3/8 (Brass) - 24"	5
	00-719377	Connector - Straight 3/8 x 3/8 (Brass) - 36"	9
	00-719377	Connector - Straight 3/8 x 3/8 (Brass) - 48"	10
	00-719377	Connector - Straight 3/8 x 3/8 (Brass) - 60"	13
	00-719377	Connector - Straight 3/8 x 3/8 (Brass) - 72"	15
23	00-498234-0000A	Grease Chute Assembly - 24", 36", 48"	1
	00-498234-0000A	Grease Chute Assembly - 60", 72"	2
24	00-722220	Tube - Flex (3/8 X 6 In.) - 24"	2
	00-722220	Tube - Flex (3/8 X 6 In.) - 36", 48"	3
	00-722220	Tube - Flex (3/8 X 6 In.) - 60", 72"	4
25	00-719376	Elbow 3/8 x 3/8 - 24"	1
	00-719376	Elbow 3/8 x 3/8 - 36", 48"	2
	00-719376	Elbow 3/8 x 3/8 - 60", 72"	3
26	00-719363	Plug 1/8 NPT Countersink - 24", 36", 48"	2
	00-719363	Plug 1/8 NPT Countersink - 60", 72"	1
27	00-719365	Plug 3/8 Countersink - 24"	1
28	00-719066	Bushing - Pipe 3/8 -1/8	1
29	00-498035-0024A	Manifold Pipe - 24", 36", 48"	1
	00-498035-0060A	Manifold Pipe - 60", 72"	1
	00-719566	1/4" Fiberglass Sleeving (for TSTAT Wire) - 24"	2
	00-719566	1/4" Fiberglass Sleeving (for TSTAT Wire) - 36"	3
	00-719566	1/4" Fiberglass Sleeving (for TSTAT Wire) - 48"	4
	00-719566	1/4" Fiberglass Sleeving (for TSTAT Wire) - 60"	5
	00-719566	1/4" Fiberglass Sleeving (for TSTAT Wire) - 72"	6

* Kit # 00-913102-00444 includes 00-719566 1/4" fiberglass sleeve.

NOTES

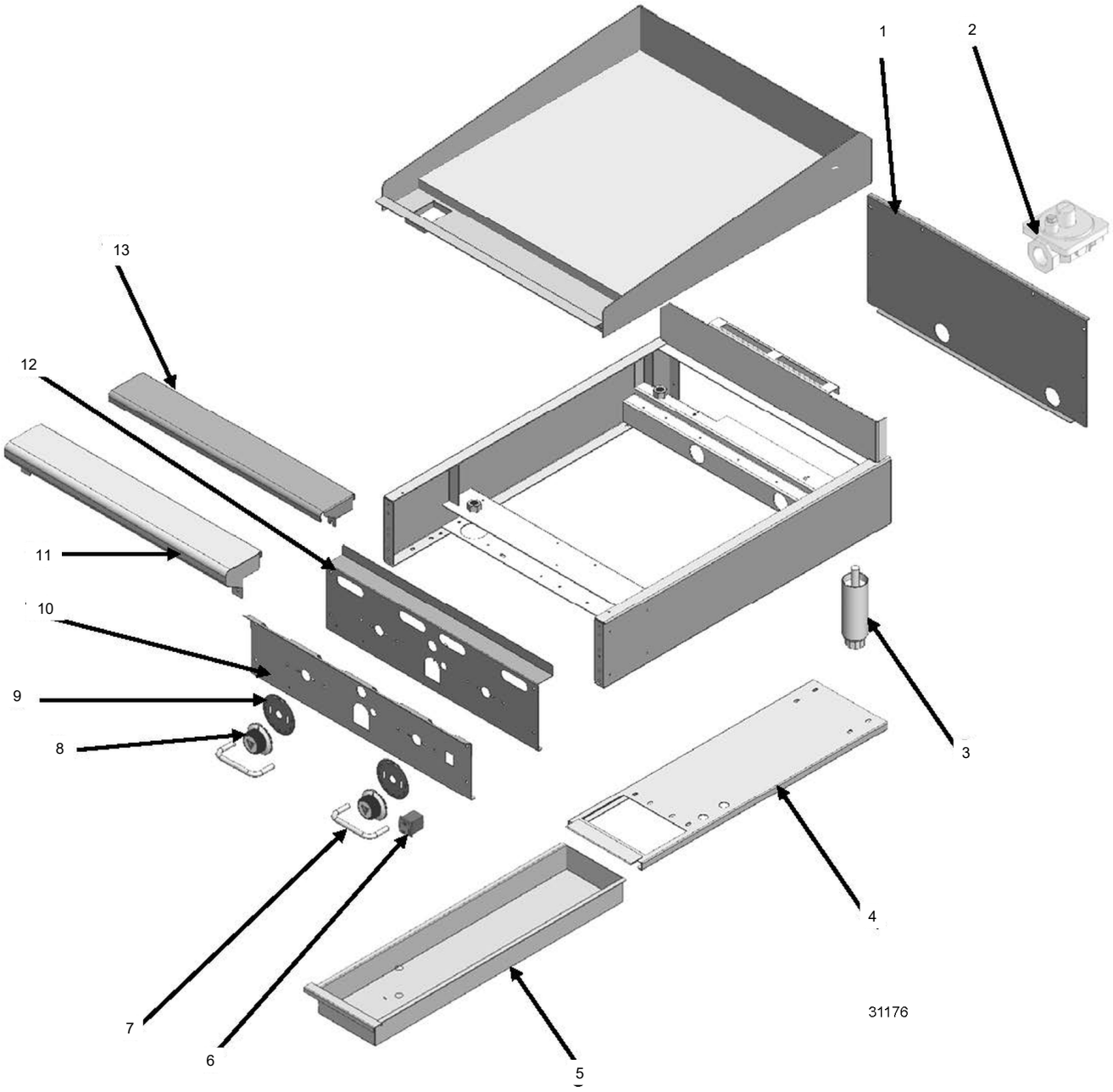

900RX AND MSA MODELS MANUFACTURED PRIOR TO MARCH 2010 EXTERIOR COMPONENTS

900RX AND MSA MODELS MANUFACTURED PRIOR TO MARCH 2010 EXTERIOR COMPONENTS

ILLUS. PL-31176	PART NO.	NAME OF PART	AMT.
1	00-788824	Panel - Back (24 In.)	1
	00-788825	Panel - Back (36 In.)	1
	00-788801	Panel - Back (48 In.)	1
	00-788826	Panel - Back (60 In.)	1
	00-788827	Panel - Back (72 In.)	1
2	00-408279-00025	Regulator - Pressure 3/4 In. (NAT)	1
	00-408279-00021	Regulator - Pressure 3/4 (LP)	1
3	00-723532	Leg - Adjustable (6 In. Lg.)	4
4	00-498398	Grease Can Guide Bracket - 24", 36", 48"	1
	00-498398	Grease Can Guide Bracket - 60", 72"	2
5	00-498082-0000A	Trough - Grease (Front) - 24", 36", 48"	1
	00-498082-0000A	Trough - Grease (Front) - 60", 72"	2
	00-790081-0000A	Trough - Grease (Rear)	1
6	00-810280-00001	Switch - Power (900RX)	1
7	00-498690	Wire Knob Guard - 24"	2
	00-498690	Wire Knob Guard - 36"	3
	00-498690	Wire Knob Guard - 48"	4
	00-498690	Wire Knob Guard - 60"	5
	00-498690	Wire Knob Guard - 72"	6
8	00-498041-00012	Knob Vulcan Griddle Knob - 24"	2
	00-498041-00012	Knob Vulcan Griddle Knob - 36"	3
	00-498041-00012	Knob Vulcan Griddle Knob - 48"	4
	00-498041-00012	Knob Vulcan Griddle Knob - 60"	5
	00-498041-00012	Knob Vulcan Griddle Knob - 72"	6
9	00-498037-0000A	Griddle Temp Dial - 24"	2
	00-498037-0000A	Griddle Temp Dial - 36"	3
	00-498037-0000A	Griddle Temp Dial - 48"	4
	00-498037-0000A	Griddle Temp Dial - 60"	5
	00-498037-0000A	Griddle Temp Dial - 72"	6
10	00-498056-00024	924RX Front Panel - 24", 60"	1
	00-498056-00036	936RX Front Panel - 36"	1
	00-498056-00048	948RX Front Panel - 48"	1
	00-498056-00060	960RX Front Panel - 60"	1
	00-498056-00072	972RX Front Panel - 72"	1
11	00-498058-0024A	Bullnose (24 In.) - 24"	1
	00-498058-0036A	Bullnose (36 In.) - 36"	1
	00-498058-0048A	Bullnose (48 In.) - 48"	1
	00-498058-0060A	Bullnose (60 In.) - 60"	1
	00-498058-0072A	Bullnose (72 In.) - 72"	1
12	00-498019-00024	NLA - Obsolete--MSA24 Front Panel - 24"	1
	00-498019-00036	MSA36 Front Panel - 36"	1
	00-498019-00048	NLA - Obsolete--MSA48 Front Panel - 48"	1
	00-498019-00060	NLA - Obsolete--MSA60 Front Panel - 60"	1
	00-498019-00072	MSA72 Front Panel - 72"	1
13	00-498023-00024	MSA24 Bullnose - 24"	1
	00-498023-00036	MSA36 Bullnose - 36"	1
	00-498023-00048	MSA48 Bullnose - 48"	1
	00-498023-00060	MSA60 Bullnose - 60"	1
	00-498023-00072	MSA72 Bullnose - 72"	1

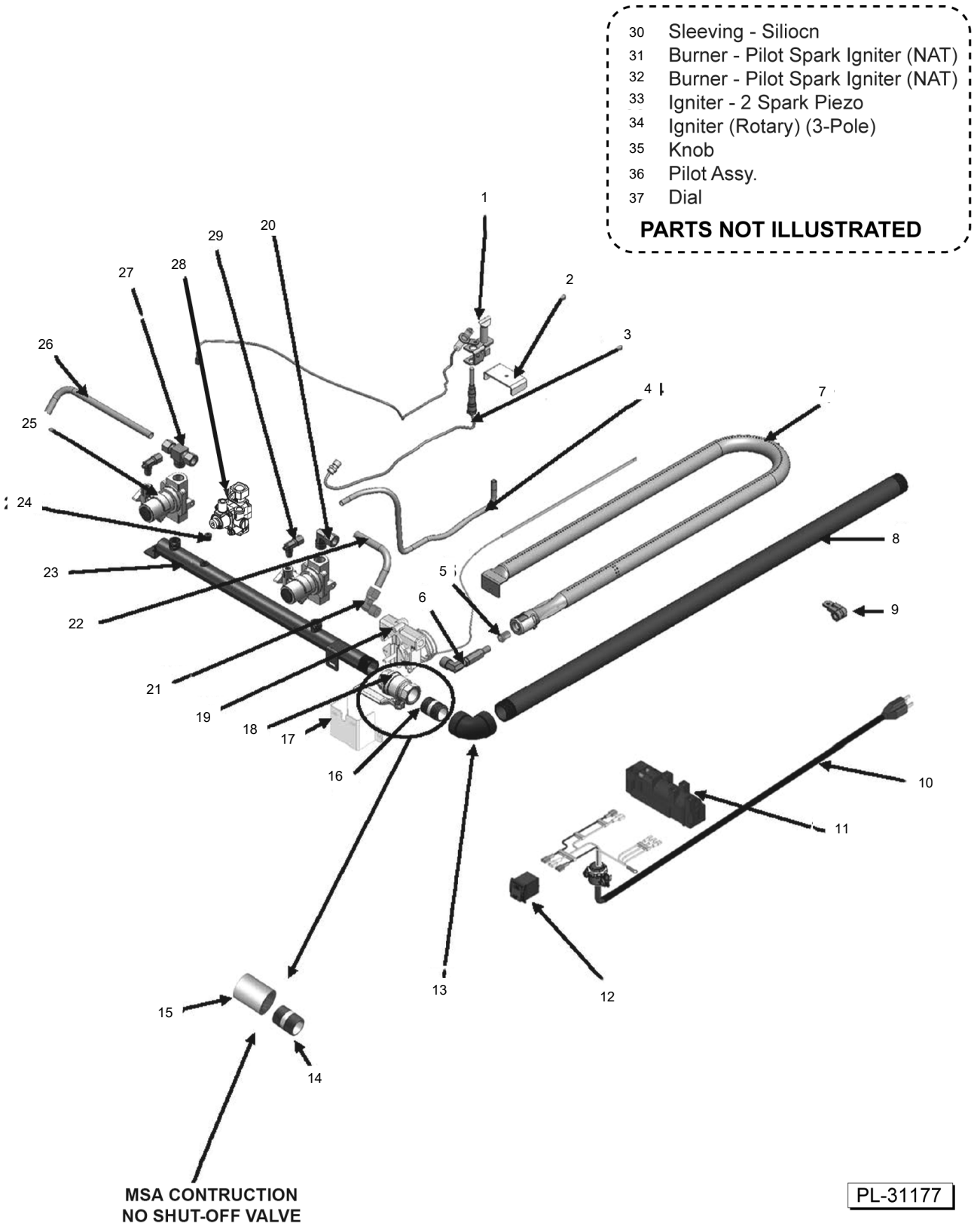

900RX AND MSA MODELS MANUFACTURED MARCH 2010 TO PRESENT
INTERIOR COMPONENTS

900RX AND MSA MODELS MANUFACTURED MARCH 2010 TO PRESENT INTERIOR COMPONENTS

ILLUS.	PART NO.	NAME OF PART	AMT.
PL-29076			
1	00-976687-0SERV	Kit, Pilot Assembly (NAT) (900RX) (36 In. Wire Lead)	AR
	00-976687-0SERV	Kit, Pilot Assembly (48 In. Wire Lead)	AR
	00-976687-0SERV	Kit, Pilot Assembly (NAT) (MSA)	AR
	00-976687-0SERV	Kit, Pilot Assembly Piezo ignition	1
	00-712363	LP Gas Pilot Orifice	AR
	00-720041	NAT Gas Pilot Orifice	AR
2	00-498682	Griddle Pilot Bracket	AR
3	00-412788-00020	Thermocouple T46	AR
	00-412788-00020	Thermocouple T46	AR
4	00-498887	Tube - Flex (1/4 x 14 In.)	AR
5	00-719951-00037	Hood - Orifice (Drill 37) (NAT) (0-3999 Ft.)	AR
	00-719951-00040	Hood - Orifice (Drill 40) (NAT) (4000-7999 Ft.)	AR
	00-719951-00042	Hood - Orifice (Drill 42) (NAT) (8000-10999 Ft.)	AR
	00-719951-00052	Hood - Orifice (Drill 52) (LP) (0-3999 Ft.)	AR
	00-719951-00053	Hood - Orifice (Drill 53) (LP) (4000-7999 Ft.)	AR
	00-719951-00054	Hood - Orifice (Drill 54) (LP) (8000-10999 Ft.)	AR
6	00-498892-0000A	Thermostat Orifice Elbow Assembly	AR
7	00-498900-0000A	Griddle Burner	AR
	00-498900-0030A	Griddle Burner (Deep Plate Units)	AR
8	00-498199	3/4" NPT X 29" Nipple	1
9	00-498883	.38 Cushioned Cord Clamp (900RX)	1
10	00-498209-0000A	Power Harness Cord (900RX)	1
11	00-498890	Electric Igniter (900RX)	1
12	00-498899	Momentary Power Switch (900RX)	1
13	00-719049	Elbow 3/4 NPT	1
14	00-498798	3/4" X 2" NPT Nipple (MSA)	1
15	00-719004	3/4" NPT Coupling (MSA)	AR
16	00-719105	NLA - Obsolete--3/4"" NPT Close Nipple (900RX)	1
17	00-498407	Bracket - Thermostat	AR
18	00-498799	3/4" NPT Straight Valve (900RX)	1
19	00-913102-00444	Valve (550F) T-Stat Combo (Incls. 00-719566 Sleeving)	AR
	00-976685-00550	Thermostat (550F) (Used with Chrome and Red Knob)	AR
	00-719566	Sleeving - Silicon	AR
	00-498096-00450	Valve (450F) T-Stat Combo (Must Be Used with Composite Plate)	AR
20	FP-085-68	Fitting- Elbow (7/16 TBG X 3/8 MPT)	AR
21	FP-085-68	Fitting- Elbow (7/16 TBG X 3/8 MPT)	AR
22	00-426508-00005	7/16" X 5" Flex Tube	AR
23	00-498052-0024A	24" Griddle Manifold W/A - 24"	1
	00-498052-0036A	36" Griddle Manifold W/A - 36"	1
	00-498052-0048A	48" Griddle Manifold W/A - 48"	1
	00-498052-0060A	60" Griddle Manifold W/A - 60"	1
	00-498052-0072A	72" Griddle Manifold W/A - 72"	1
24	00-719363	Plug 1/8 NPT Countersink	AR
26	00-426508-00010	Tube - Flex 7/16" O.D. 10" Lg.	AR
25	00-498025	Valve - BASO Confirm Type on Unit - This Has a 1 In. Plastic Red Push Button	AR
	00-944649	Safety Valve (Robertshaw)	AR
	00-946027	Safety Valve (Grand Mate)	AR
27	00-498715	3/8" MPT X 7/16" CC TEE	AR
28	00-498025	Valve - BASO Confirm Type on Unit - This Has a 1 In. Plastic Red Push Button	AR
	00-944649	Safety Valve (Robertshaw)	AR
	00-946027	Safety Valve (Grand Mate)	AR
29	00-404193-00001	Valve - Pilot	AR
30	00-719566	1/4" Fiberglass Sleeving (for TSTAT Wire)	AR
31	00-976687-0N36A	Pilot Burner - Pilot Spark Igniter (NAT)	AR
32	00-976687-0N48A	Pilot Burner - Pilot Spark Igniter (NAT)	AR
33	00-921189	Igniter - 2 Spark Piezo Used With 00-976687-ONPZA Pilot Assembly for Piezo Ignition Not Shown	AR
34	00-944255	Igniter (Rotary) (3-Pole) Used With 00-976687-ONPZA Pilot Assembly for Piezo Ignition Not Shown	1

900RX AND MSA MODELS MANUFACTURED MARCH 2010 TO PRESENT INTERIOR COMPONENTS

ILLUS.	PART NO.	NAME OF PART	AMT.
PL-29076			
35	00-944254	Knob Used With 00-944255 Rotary Igniter and 00-976687-0NPZA Pilot Assembly for Piezo Ignition Not Shown	1
36	00-976687-ONPZA	Pilot Assy.	1
37	00-810069	Dial (Used with Thermostat) 450F Thermostat Dial	AR

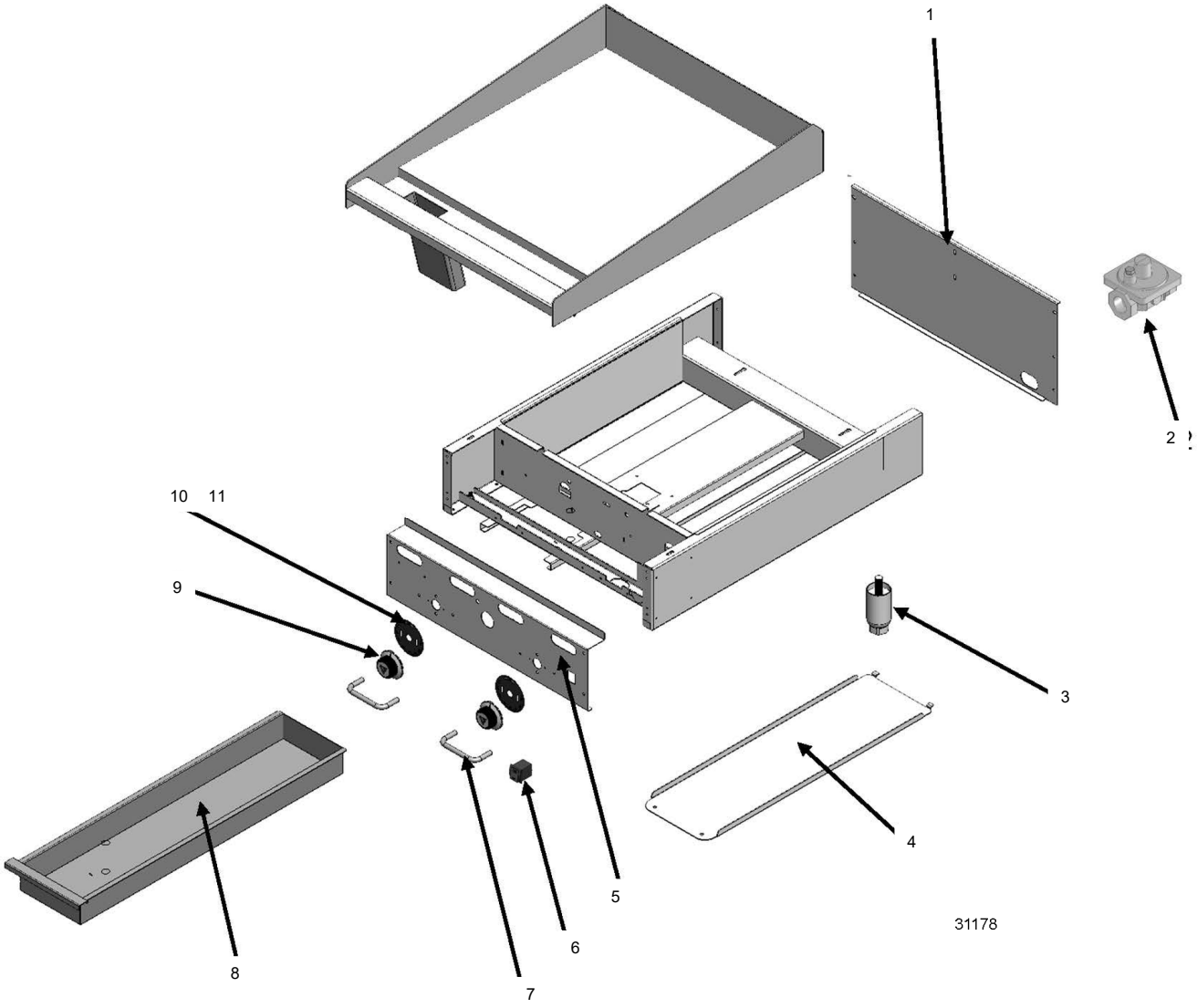

900RX AND MSA MODELS MANUFACTURED MARCH 2010 TO PRESENT
EXTERIOR COMPONENTS

900RX AND MSA MODELS MANUFACTURED MARCH 2010 TO PRESENT
EXTERIOR COMPONENTS

ILLUS. PL-31178	PART NO.	NAME OF PART	AMT.
1	00-498791-00024	Panel - Back (24 In.)	1
	00-498791-00036	Panel - Back (36 In.)	1
	00-498791-00048	Panel - Back (48 In.)	1
	00-498791-00060	Panel - Back (60 In.)	1
	00-498791-00072	Panel - Back (72 In.)	1
2	00-408279-00026	Regulator - Pressure (NAT)	1
	00-408279-00021	Regulator - Pressure 3/4 (LP)	1
3	00-710503	Leg - Adjustable (4 In. Lg.) (Standard)	4
	00-723532	Leg - Adjustable (6 In. Lg.) (Optional)	4
	00-723532-00002	2" OD X 10" L Adjustable Leg (Optional)	4
4	00-976594	Chassis Bottom Heat Shield	AR
	00-976594-00030	Chassis Bottom Heat Shield Deep Plate	AR
5	00-976909-00072	Panel - Griddle (Front) (72 In.)	1
	00-976909-00060	Panel - Griddle (Front) (60 In.)	1
	00-976909-00048	Panel - Griddle (Front) (48 In.)	1
	00-976909-00036	Panel - Griddle (Front) (36 In.)	1
	00-976909-00024	Panel - Griddle (Front) (24 In.)	1
*	00-976910	Cover - Griddle Front Universal Safety Valve	AR
6	00-498898	Switch Hole Plug (MSA)	1
7	00-498690	Guard - Knob	AR
8	00-498082-0000A	Trough - Grease	AR
	00-790081-0000A	Trough - Grease (Rear)	1
	00-976593	Bracket - Grease Can	1
	00-976593-00030	Bracket - Grease Can Deep Plate	1
9	00-498041-00012	Knob Black/Silver Ring Used With Dial Plate 00-498037-0000A	AR
	00-976870-12250	Knob Chrome/Red Used With Dial Plate 00-976876-00550 or 00-976876-00450	AR
10	00-498037-0000A	Dial, 550 Degree Used With Knob 00-498041-00012	AR
	00-976876-00550	Dial, 550 Degree Used With Knob 00-976870-12250	AR
11	00-498945-0000A	Dial - 450 degree-for use with composite griddle plates. Used with Knob 00-498041-00012	AR
	00-976876-00550	Dial, 550 Degree Used With Knob 00-976870-12250	AR

* One Per Safety Valve